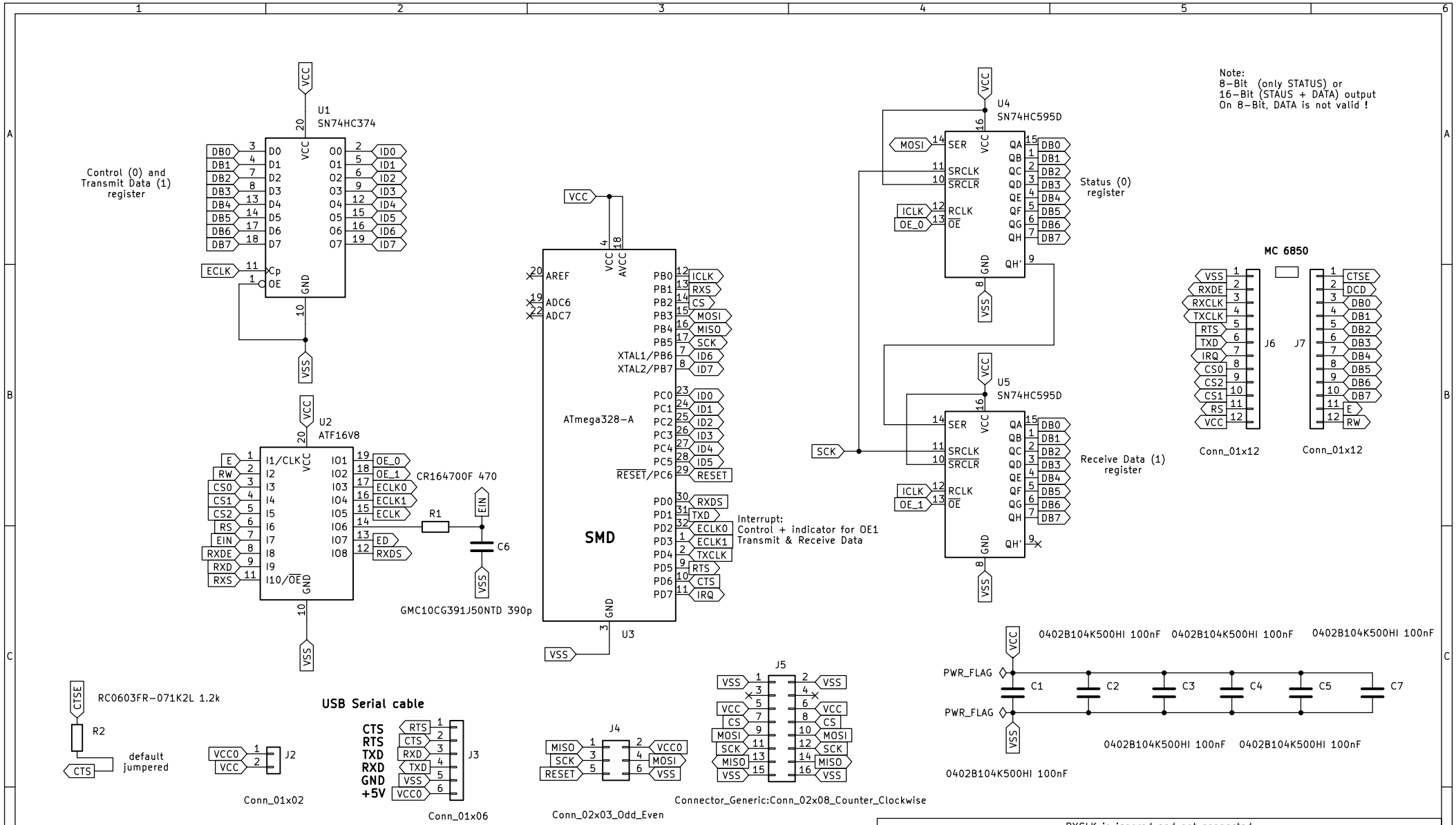

RXCLK is ignored and not connected
TXCLK is used also for RXCLK

DCD not used, is anyhow always low

RXD fom 6850 socket or external serial port is software selected
Default is RXDE from 6850 socket

Sheet: /
File: 6850P.kicad_sch

Title: M6850P Emulation module SMD

Size: A4	Date: 2025	Rev: A1
KiCad E.D.A. 8.0.6		Id: 1/1